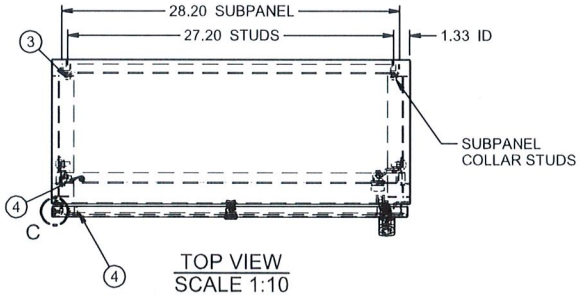

TOP VIEW
SCALE 1:10

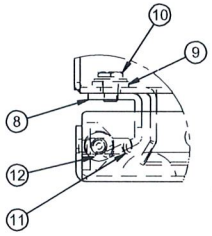

DETAIL C
SCALE 1:1.5

Approval
3/2/23
Dean Dupre

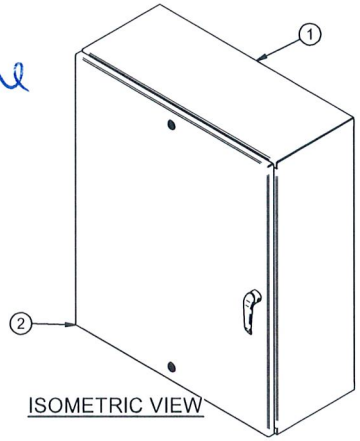

ISOMETRIC VIEW

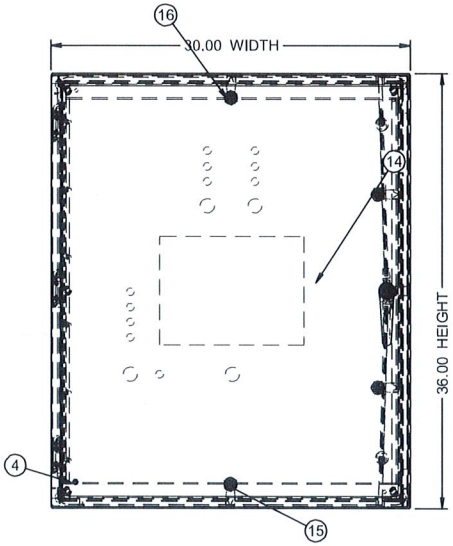

FRONT VIEW
SCALE 1:10

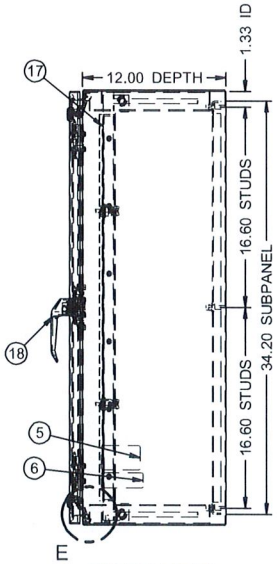

RIGHT VIEW
SCALE 1:10

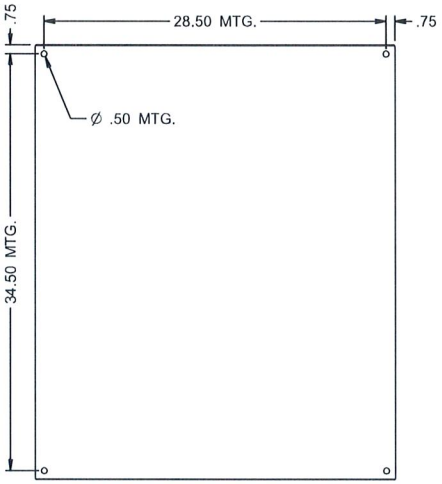

BACK VIEW
SCALE 1:10

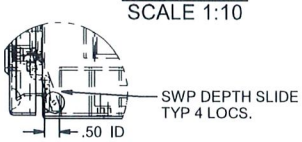

DETAIL E
SCALE 1:4

SUBPANEL(S) SHOWN
FOR REFERENCE ONLY

BILL OF MATERIALS

#	PN	DESC	QTY
1	ESSS6-363012-913_H_ASM	TYPE 12, 4X 316SS SINGLE DOOR WALL MOUNT ENCLOSURE	1
2	ESSS6-363012-913_D1_ASM	DOOR, WELDMENT	1
3	200-0057	NUT, FLANGE, SS188, 3/8-16, SERRATED	6
4	200-0064	NUT, KEPS, SS188, 1/4-20	2
5	200-0113	LABEL, UL ICP TYPE 3R,12,13,4,4X	1
6	200-0500	LABEL, MANUFACTURE / ORDER# w/SCHAEFER'S LOGO & US FLAG	1
7*	200-0105	POCKET, SMALL DATA, GREY (7.125"W x 6.625"H x .920"D)w/DOUBLE SIDED TAPE	1
8	200-1646	Hinge Base for HI-MDSS-140130, 304SS	3
9	200-2066	Washer, Flat, Acetal, #10, 0.196 Id, 0.453 Od, 0.075 Thk	6
10	200-1668	SCREW, 10-32 X 1/4" SS FLANGED HEX HEAD W/ LOCTITE PATCH	6
11	200-1647	Hinge Pin for HI-MDSS-140130, 304SS	3
12	200-1642	Hinge Clip for HI-MDMS-140130, Red Plastic	3
13	200-2039	RAKU PUR 32-3250 A IN 200 KG BARRELS (441 LBS)	1
14*	200-0095	WASHER, SEALING, STEEL, ZN FINISH, 3/8, 0.43 ID, 0.75 OD, BONDED SEALING WASHER	4
15	200-0037	LATCH, QT, SS, SS SLOTTED INSERT	2
16	200-0010	CAM, 1 PT OFFSET DN, STOP, STEEL, ZN FINISH, 12 H, 45 L	2
17	ESSS6-363012-913 SWP		1
18	200-3583	Handle, QT, Padlocking, SS316, IP65 (L53)	1

DIMENSIONS APPLY BEFORE SURFACE TREATMENT

TOLERANCES UNLESS OTHERWISE SPECIFIED

0.xxx	± 0.010
0.xx	± 0.06
0.x	± 0.1
x	± 0.25
x.x°	1°

	NAME	DATE
DRAWN BY:	djames	2/17/2023

Schaefer's ELECTRICAL ENCLOSURES
4680A NASH ROAD
SCOTT CITY, MO 63780
PH. (573) 986-9400 | FAX. (573) 986-9499
WEB PAGE electrical-enclosures.com

THIRD ANGLE PROJECTION

CUSTOMER: KEY ELECTRONIC SOLUTIONS

TITLE: N4X/12/13/3R SINGLE DOOR ELITE SERIES ENCLOSURE 36.000"H x 30.000"W x 12.000"D

B | FINISH: POLISHED | WEIGHT: 120.578 lbm

FILE: ESSS6-363012-913Approval | REV: -

CUST. DWG. TYPE II AUTOMATION DOOR PANEL2 PUMP C | REV: -

MAT. 14GA. 316SS | SHEET 1 OF 4

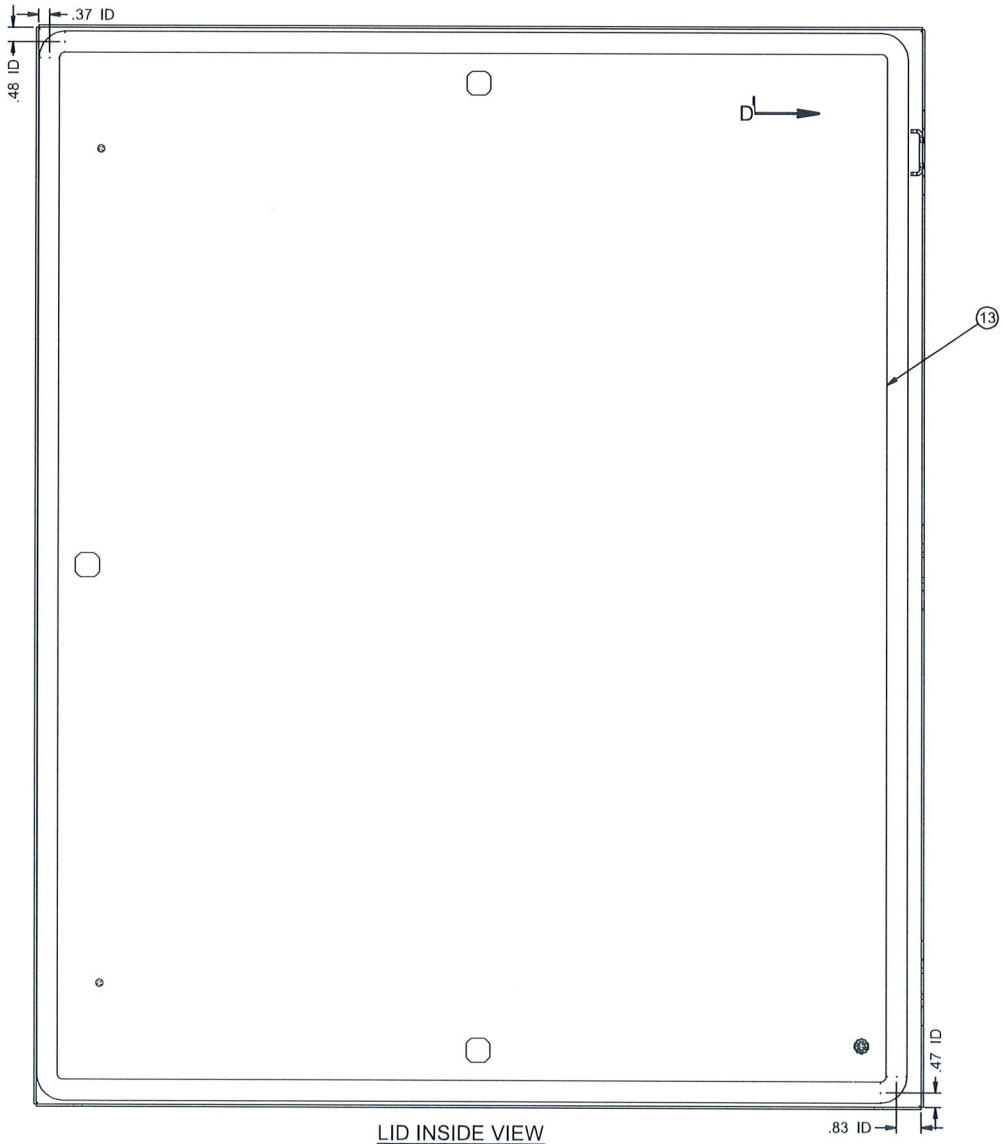

LID INSIDE VIEW

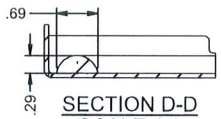

SECTION D-D
SCALE 1:2

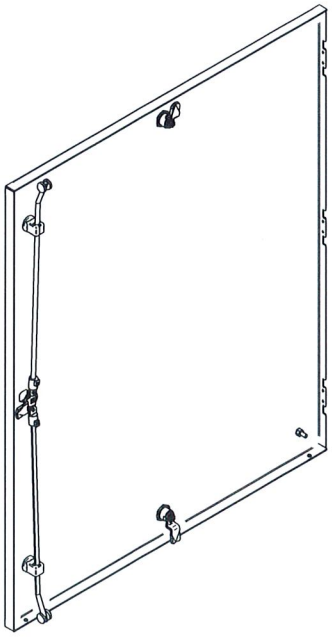

LATCH ASSEMBLY VIEW

Approval
3/7/23
Dean Dupre

DIMENSIONS APPLY BEFORE SURFACE TREATMENT	
TOLERANCES UNLESS OTHERWISE SPECIFIED	
0.xxx	± 0.010
0.xx	± 0.06
0.x	± 0.1
x	± 0.25
x.x°	1°

	NAME	DATE
DRAWN BY:	djames	2/17/2023

Schaefer's ELECTRICAL ENCLOSURES
4680A NASH ROAD
SCOTT CITY, MO 63780
PH: (573) 986-9400 | FAX: (573) 986-9499
WEB PAGE: electricalenclosures.com

THIRD ANGLE PROJECTION

CUSTOMER: KEY ELECTRONIC SOLUTIONS

TITLE: N4X/12/13/3R SINGLE DOOR ELITE SERIES ENCLOSURE 36.000"H x 30.000"W x 12.000"D

B | FINISH: POLISHED | WEIGHT: 120.578 lbm

FILE: ESSS6-363012-913Approval | REV: -

CUST. DWG. TYPE II AUTOMATION DOOR PANEL2 PUMP C | REV: -

MAT. 14GA. 316SS | SHEET 2 OF 4

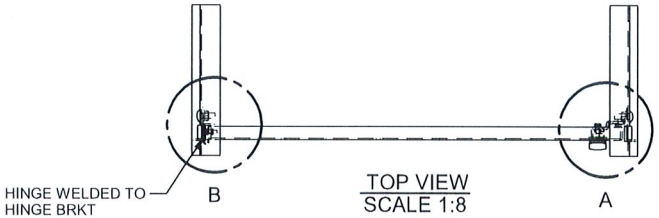

TOP VIEW
SCALE 1:8

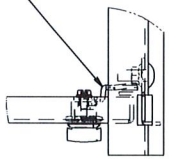

DETAIL A
SCALE 1:4

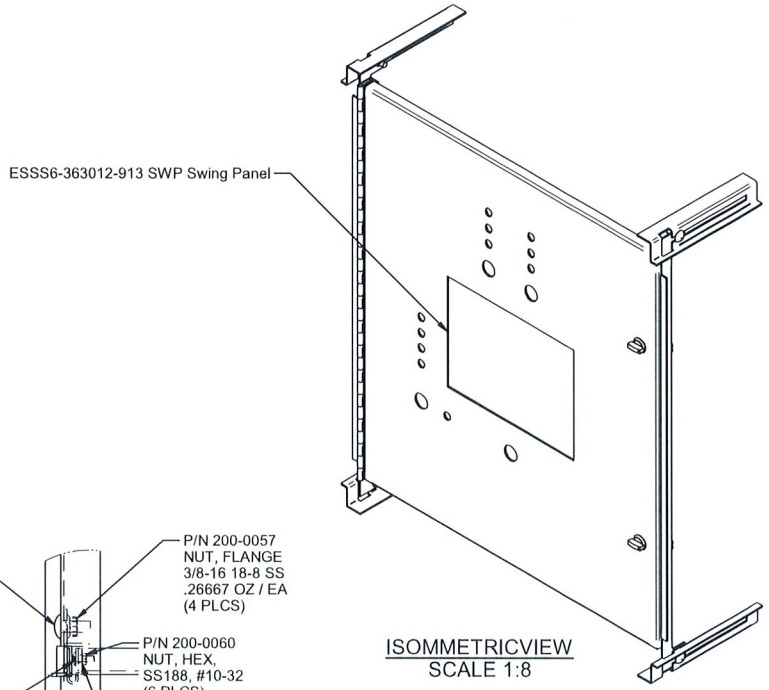

ISOMMETRICVIEW
SCALE 1:8

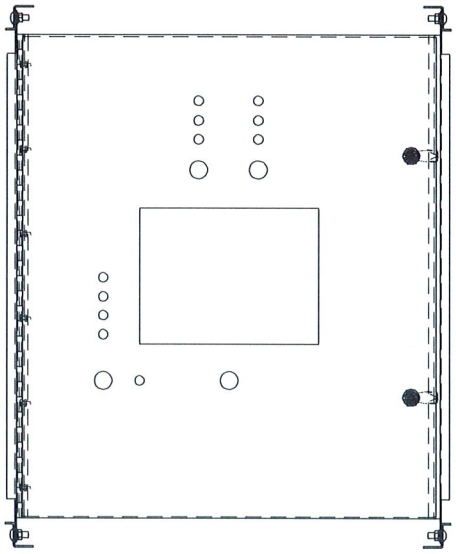

FRONT VIEW
SCALE 1:8

DETAIL B
SCALE 1:4

Approval
3/2/23
Dean Dupre

DIMENSIONS APPLY BEFORE SURFACE TREATMENT		NAME	DATE	CUSTOMER: KEY ELECTRONIC SOLUTIONS
	DRAWN BY:	djames	2/17/2023	
TOLERANCES UNLESS OTHERWISE SPECIFIED	Schaefer's ELECTRICAL ENCLOSURES			TITLE: N4X/12/13/3R SINGLE DOOR ELITE SERIES ENCLOSURE 36.000"H x 30.000"W x 12.000"D
0.xxx ± 0.010	4680A NASH ROAD SCOTT CITY, MO 63780 PH (573) 986-9400 | FAX (573) 986-9499 WEB PAGE electrical-enclosures.com			B FINISH: POLISHED WEIGHT: 120.578 lbm
0.xx ± 0.06				FILE: ESSS6-363012-913Approval REV: -
0.x ± 0.1	THIRD ANGLE PROJECTION			CUST. DWG. TYPE II AUTOMATION DOOR PANEL2 PUMP C REV: -
x ± 0.25				MAT. 14GA. 316SS SHEET 3 OF 4
x.x° 1°				

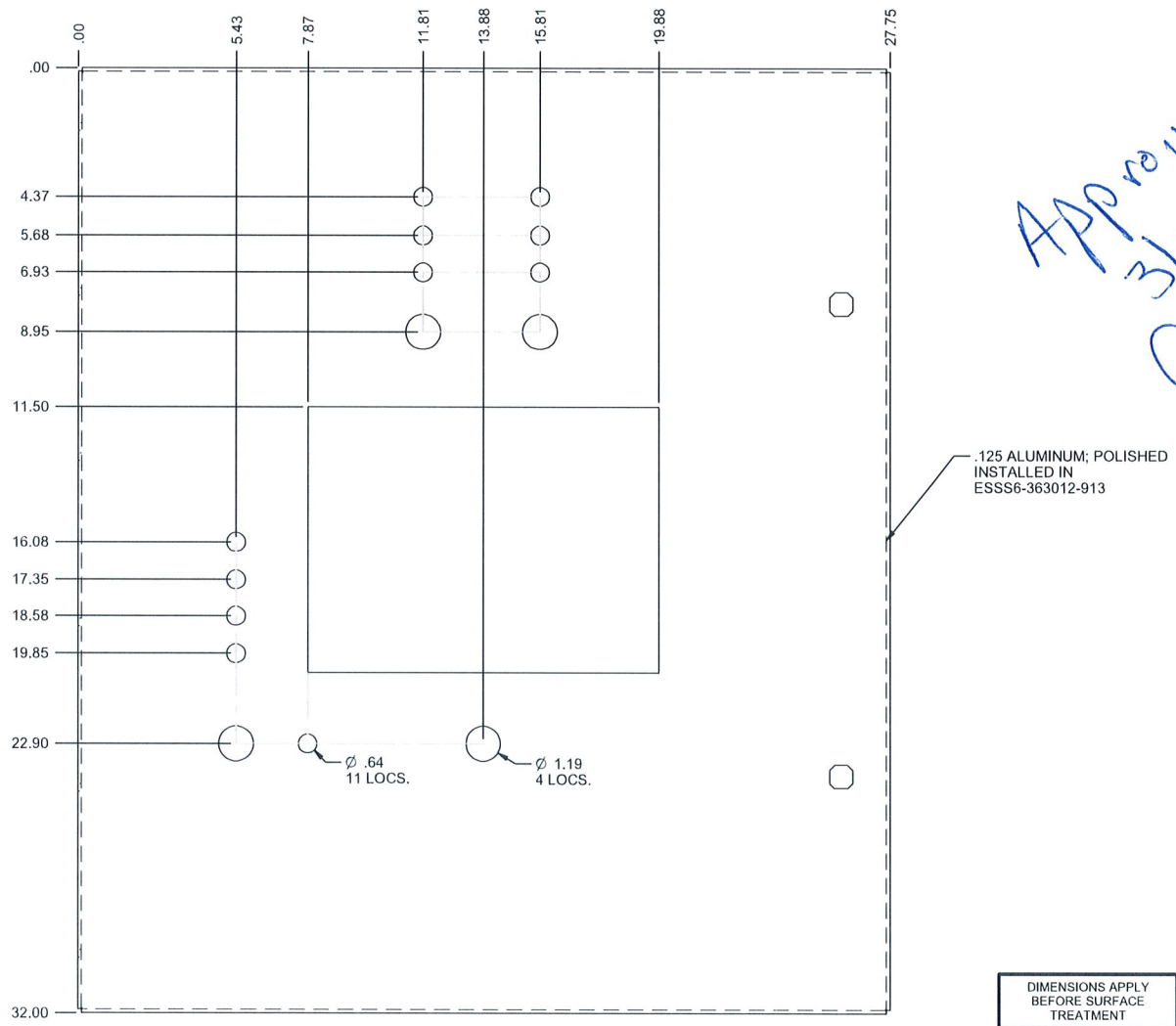

Approval
3/8/23
Dean Dupre

FRONT VIEW
SWING PANEL DOOR
SCALE 1:4

DIMENSIONS APPLY BEFORE SURFACE TREATMENT			NAME	DATE	CUSTOMER: KEY ELECTRONIC SOLUTIONS
		DRAWN BY:	djames	2/17/2023	
TOLERANCES UNLESS OTHERWISE SPECIFIED		Schaefer's ELECTRICAL ENCLOSURES 4680A NASH ROAD SCOTT CITY, MO 63780 PH: (573) 986-9400 | FAX: (573) 986-9499 WEB PAGE: electrical-enclosures.com			TITLE: N4X/12/13/3R SINGLE DOOR ELITE SERIES ENCLOSURE 36.000"H x 30.000"W x 12.000"D
0.xxx	± 0.010				B FINISH: POLISHED WEIGHT: 120.578 lbm
0.xx	± 0.06				FILE: ESSS6-363012-913Approval REV: -
0.x	± 0.1	THIRD ANGLE PROJECTION			CUST. DWG. TYPE II AUTOMATION DOOR PANEL2 PUMP C REV: -
x	± 0.25				MAT. 14GA. 316SS SHEET 4 OF 4
x.x°	1°				